RECONCRAFT

OFFSHORE INTERCEPTOR

OFFSHORE INTERCEPTOR SERIES

Principal Specifications

LENGTH	36'	38'	42'	46'	50'	55'
BEAM OPTIONS	10'-6"	10'-6"	10'-6"	11'-6"	12'-6"	12'-6"
HULL TYPE OPTIONS	Patented Twin Stepped Hull	Patented Twin Stepped Hull	Patented Twin Stepped Hull	Patented Twin Stepped Hull	Patented Twin Stepped Hull	Patented Twin Stepped Hull
PROPULSION OPTIONS	Outboard Surface Drive I/O	Outboard Surface Drive I/O	Outboard Surface Drive I/O	Outboard Surface Drive I/O	Outboard Surface Drive I/O	Outboard Surface Drive I/O
FUEL (STANDARD)	250 Gallons	300-450 Gallons	350 - 500 Gallons	400 - 600 Gallons	450 -650 Gallons	500 - 700 Gallons

OFFSHORE INTERCEPTOR

Proven Platform

The Offshore Interceptor Series (OIV) is ideal for marine units that need a large multi-mission craft that can operate offshore at high speeds and long distances. With multiple deck configurations available, including the ability to launch a jet ski and two 4.7m combat rubber raiding craft, the OIV can be used to carry out a variety of operations. Multiple sizes available.

CONFIGURATION	Tactical Center Console 3/4 Cabin Full Cabin
SPEED / RANGE	60+ knots | 300+ NM
PROPULSION	Outboard | I/O | Surface Drive

MIN. MATERIAL	THICKNESS	ALUMINUM
BOTTOM	0.250"	5083 / 5086 Alloy
SIDES	0.190"	5083 / 5086 Alloy
TRANSOM	0.250"	5083 / 5086 Alloy
DECK	0.190"	5052 / 5083 / 5086 Alloy
CONSOLE/CABIN	0.190"	5052 / 5083 / 5086 Alloy

FEATURES

- Multiple deck configurations with the ability to carry and launch several additional assets
- Patented twin-stepped offshore hull engineered for higher operational speeds and greater vessel range during offshore operations.
- Rapidly reconfigurable seating and mission pallet configurations using NATO L-Track deck attachment system.
- Available in tactical center console, ¾ cabin, or full cabin configurations.

DESIGN QUALITIES

- Helm and console designed to meet ISO communication, navigation, and tactical equipment requirements.
- Ergonomic and human-factor engineered controls and instrument layouts significantly reduce crew fatigue and maintain crew safety.
- Simplistic and redundant mechanical and electrical systems, with reserve capacity to support upgrades, yield unparalleled vessel reliability.
- Rugged hull construction, commonality of parts, and full access to key systems significantly decrease maintenance time and ownership costs.
- Multi-mission configurations result in tremendous tactical capability.

Phone: **+1 (877) 645-7761** | Email: **info@reconcraft.com** | Web: **reconcraft.com**

OFFSHORE INTERCEPTOR SERIES

Additional Features & Options

CONSOLE & SEATING	Human-Factor Engineered Layouts Shock Mitigating & Adjustable Seats Modular Seating System w/ L-Track Height Adjustable Windshield Wired | Wireless Crew Communication System
HULL PROTECTION & FENDERING	Patented Twin-Stepped Hull Design HullShield™ Bottom Protection System Hybrid Air/Foam Fendering Collar Black or Non-Marking Rub Rail Outboard Engine Guard Push Knee System
DECK	Crane and Stowage for Two 4.7m CRRCs Self-Bailing Decks Deck Attachment Points with L-Track Tactically Designed Configurations Searchlight Full Deck Lighting Package Flush Mount Cleat Package 4-Point Lifting Eyes Tow Bollard and Reel Anchor and Ground Tackle Storage Polyurethane Paint System 3M Safety Walk™ Deck Tread Large Grab Rails Tie Points - 8x Floor Mount Fresh Water Washdown System
NAVIGATION, ELECTRONICS, & SENSORS	Full GPS, Radar, Sonar AIS Forward Looking Infrared Camera (FLIR) CBRN Detection & Monitoring Vessel G-Force Monitoring System

ELECTRICAL	AC Generator Push Button Breakers Battery Charger & Monitor 12V | USB Accessory Plugs
MILITARY | LE | RESCUE	Two 4.7m CRRCs w/ 55 HP Multi-Fuel Outboards & One Jet-Ski Ballistic Protection (per ITAR) Weapon Mount Foundations (per ITAR) Law Enforcement Lighting Package IR Strobe & Lighting Package Rescue Basket Mounts (Quick-Release) Long Gun Storage System Low Visual Detection Paint Schemes Fire-Fighting System w/ Remote Operated Nozzle Dive Ladder Side Dive Doors Helicopter Transportable
SAFETY	Watertight Compartments & Hatches Bilge Pumps (Auto/Manual) Fire Suppression System
MISCELLANEOUS	Heated Windshield Glass Galley and Head Systems Retractable Aft Canopy Diesel Heating System Air Conditioning System Condition-Based Maintenance Package

Additional Features & Options

The Offshore Interceptor Series carries and launches three additional assets; two 4.7m combat rubber raiding craft with 55 HP multi-fuel outboards and one jet-ski.

1. **Sea-Doo Spark - 3 person**
2. **2x Zodiac F470 CRRCs**
3. **2x 55 HP Outboards**
4. **Collapsible Davit**

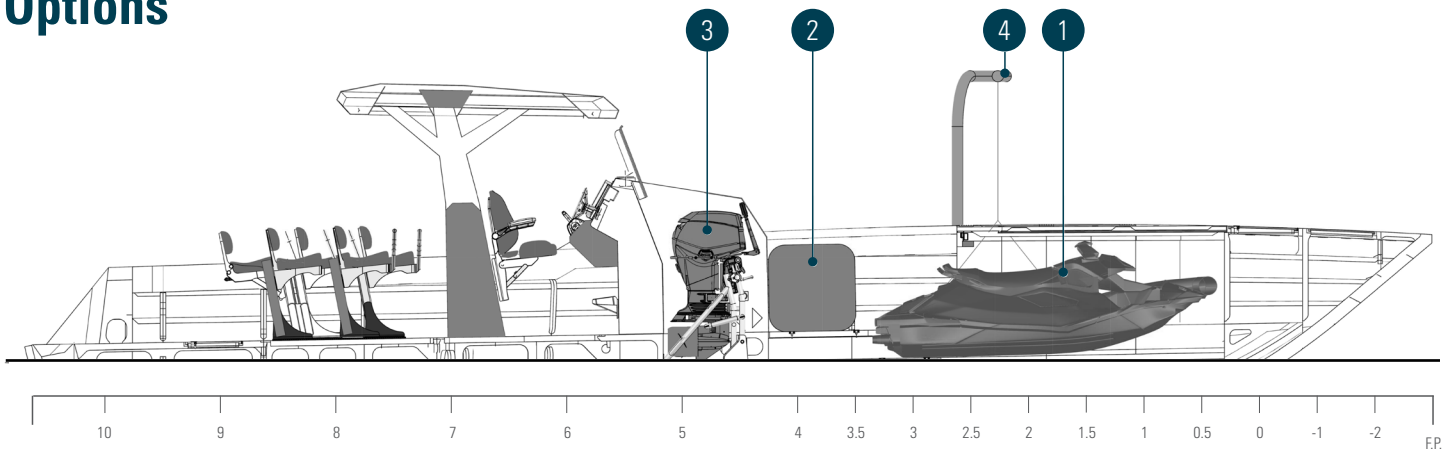

CENTERLINE SECTION

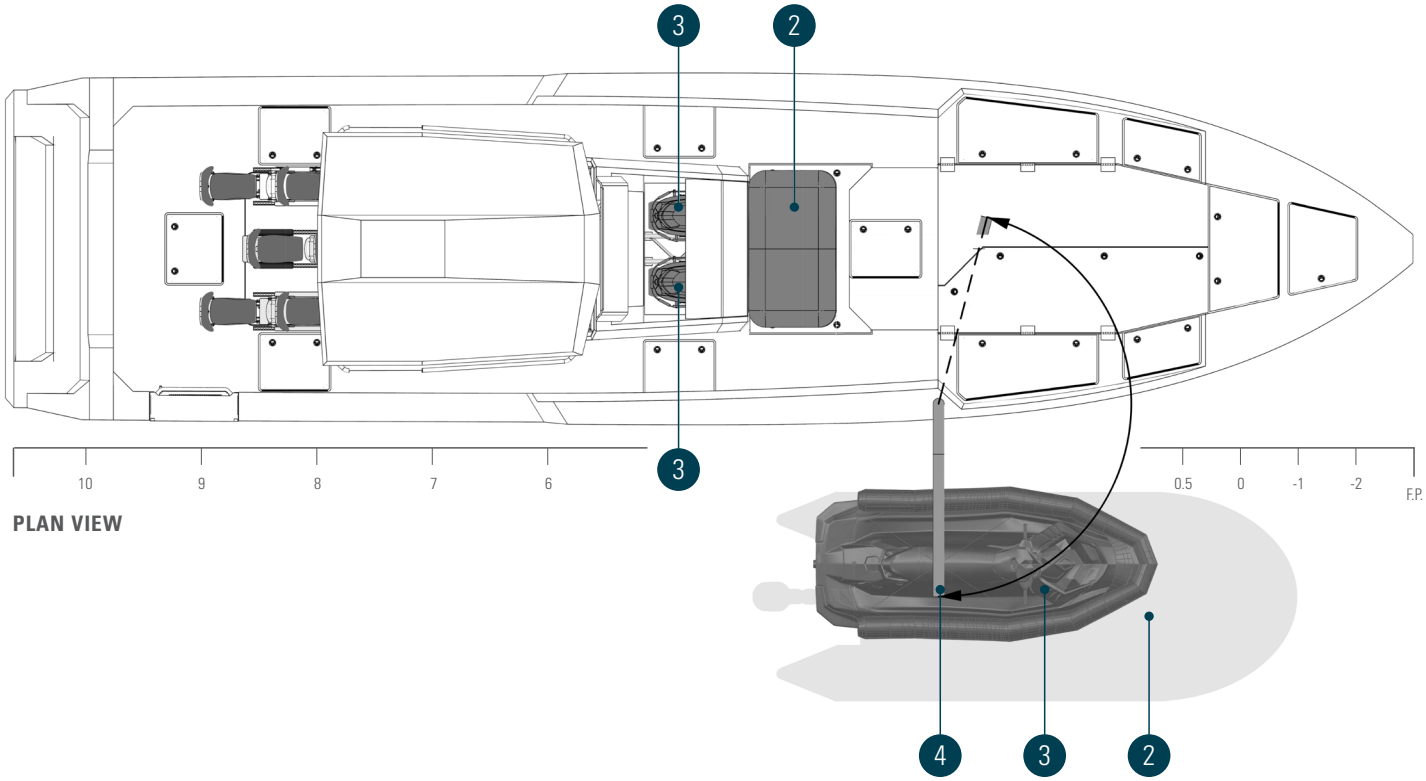

PLAN VIEW

Additional Features & Options

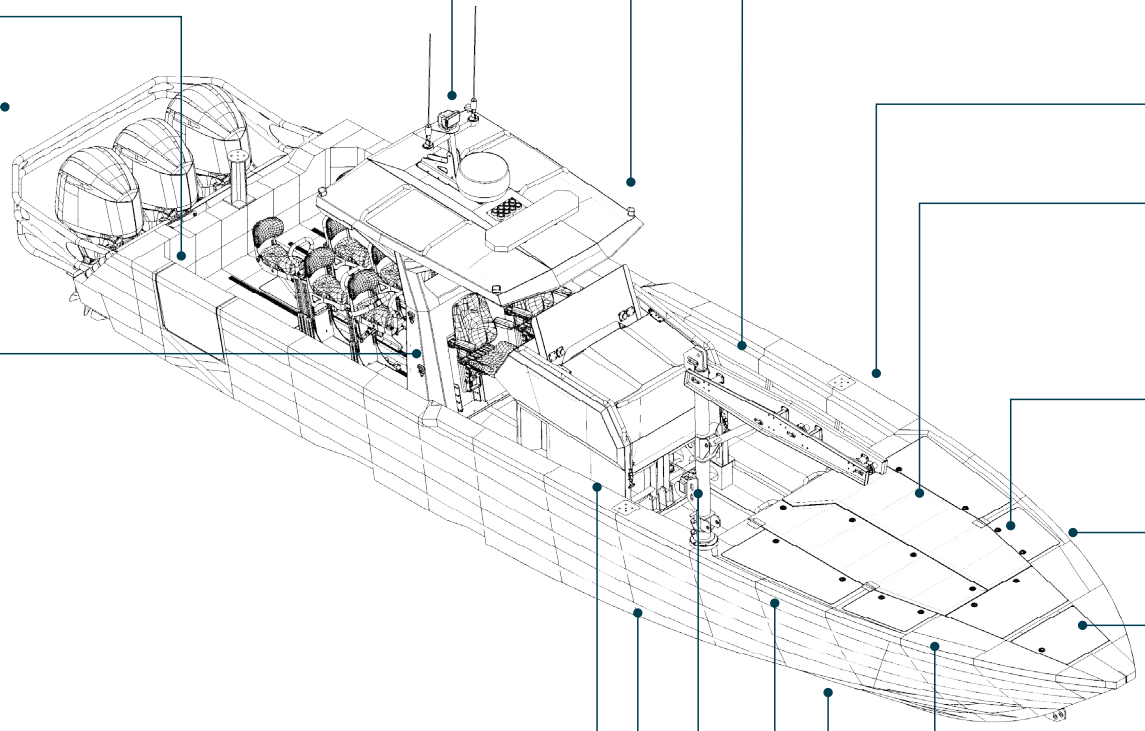

- Full Deck Lighting Package
- Searchlight
- Side Dive Doors
- Fresh Water Washdown System
- Wired | Wireless Crew Communication System
- Shock Mitigating & Adjustable Seats
- Modular Seating System w/ L-Track
- Human-Factor Engineered Layouts
- Vessel G-Force Monitoring System
- Full GPS, Radar, Sonar
- Weapon Mount Foundations (per ITAR)
- Black or Non-Marking Rub Rail
- Crane and Stowage for Two 4.7m CRRCs
- 3M Safety Walk™ Deck Tread
- Self-Bailing Decks
- 4-Point Lifting Eyes / Helicopter Transportable
- Two 4.7m CRRCs w/ 55 HP Multi-Fuel Outboards & One Jet-Ski
- Anchor and Ground Tackle Storage
- Watertight Hatches & Compartments
- Bilge Pumps (Auto/Manual)
- Low Visual Detection Paint Schemes
- Cleat Package
- HullShield™ Bottom Protection System
- Patented Twin-Stepped Hull Design

OFFSHORE INTERCEPTOR SERIES

OFFSHORE INTERCEPTOR SERIES

OFFSHORE INTERCEPTOR SERIES

Phone: **+1 (877) 645-7761** | Email: **info@reconcraft.com** | Web: **reconcraft.com**

RECONCRAFT